Assembly Instructions

BOB'S DISCOUNT FURNITURE

ITEM:988-04 CONTEMPO-UPHOLSTERED BENCH SKU# 20082095013

WARNING: To avoid serious personal injury:

- Carefully and strictly follow assembly instructions. Improper assembly of furniture can result in structural failure, instability of the product, or tip-over.
- Monitor and carefully control the assembly components. These include small parts and hardware that may present a choking hazard to small children. Bob's furniture should be assembled only by responsible adults and children should not be involved in the assembly process.
- Where provided, wall mounting hardware should always be used as prescribed in these instructions to anchor furniture to walls. Proper use of the wall mounting hardware can significantly reduce the potential for furniture tip-over and crushing injuries.

CODE	PARTS LIST:		QTY
A	Leg Frame	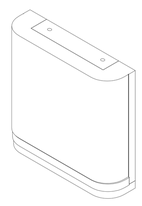	2 pcs
B	Cusion Seat with Frame	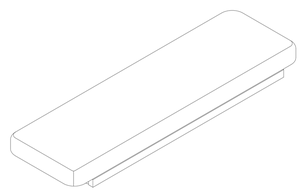	1 pc

HARDWARE LIST

NO.	SKETCH	DESCRIPTION	QTY
1	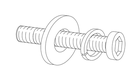	Flat Washer Ø5/16"*3/4"*1/16"	8pcs
		Spring Washer Ø5/16"	8pcs
		Bolt Ø5/16"*2-1/4"	8pcs
2	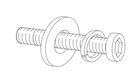	Flat Washer Ø5/16"*3/4"*1/16"	4pcs
		Spring Washer Ø5/16"	4pcs
		Bolt Ø5/16"*1-3/4"	4pcs
3		Allen Wrench M4*2-1/4"	1pc

Step 1

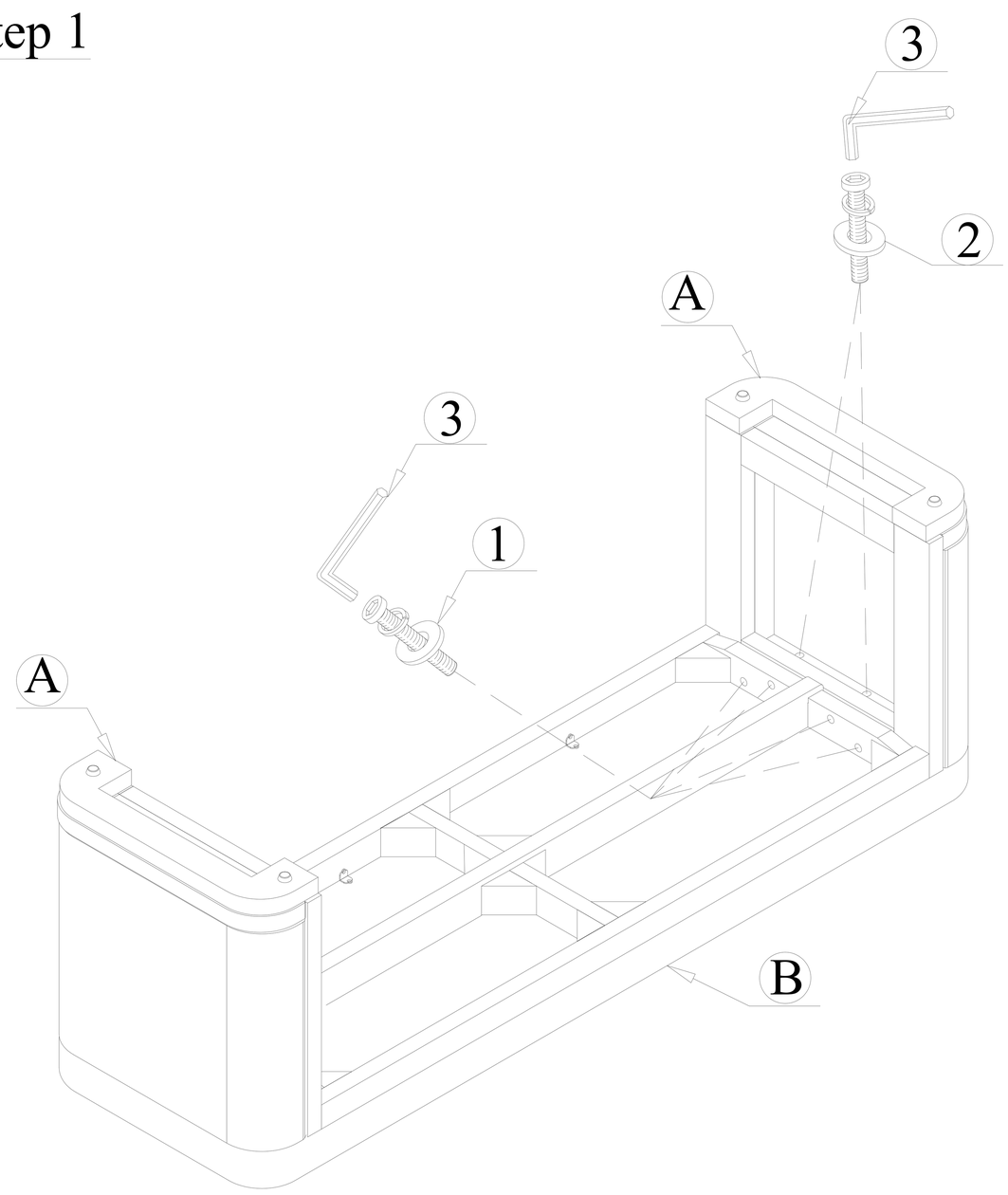

COMPLETE

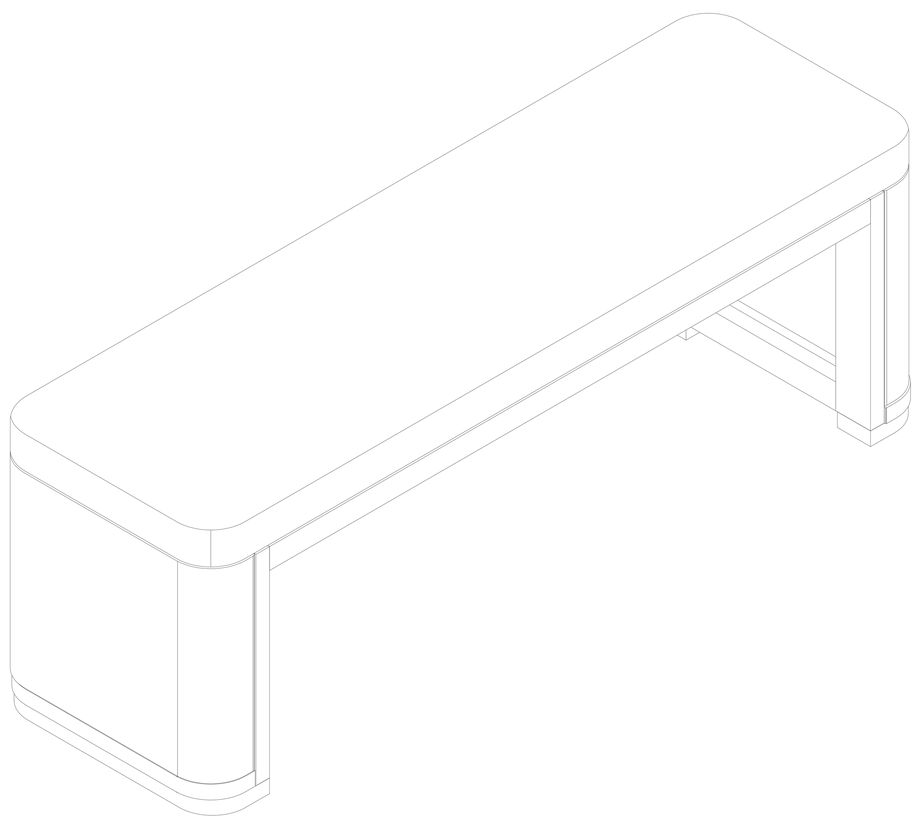

Hardware Pack Location (s):

MADE IN VIETNAM